RPS scrubber designs

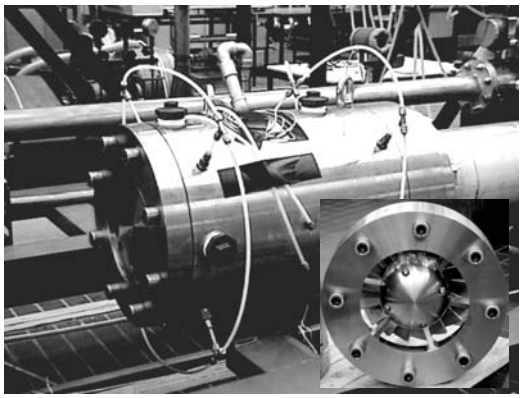

An RPS with an axial inlet and natural drive is tested for removal of dispersed oil droplets from water.
T = 20 °C, P = 10 bar, m = 1 kg/s

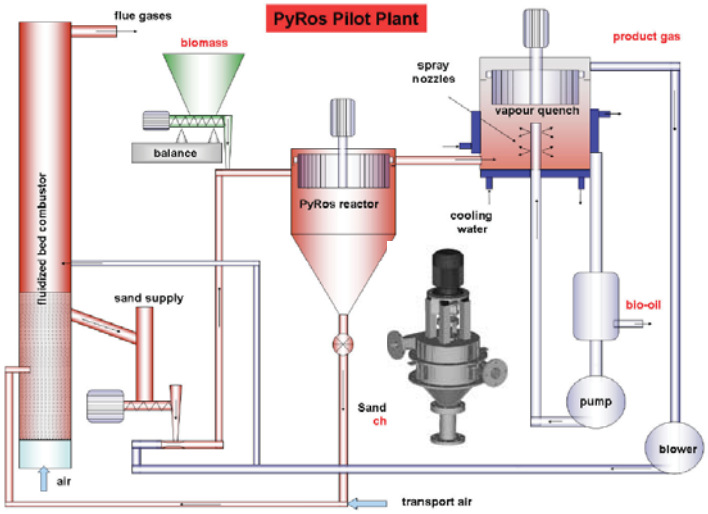

In the Pyros flash pyrolysis pilot plant, the RPS serves as a particles arrestor in the high temperature reactor. A second RPS is used in the quench system for quick oil condensation. External drives are added for a pumping action.
T = 600 °C, P = 1 bar

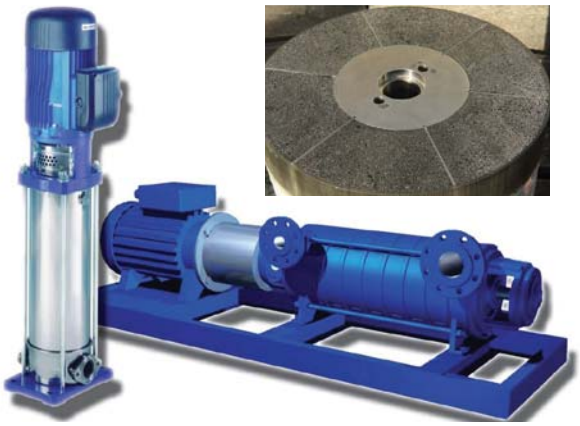

In the Dynamic Centrifugal Coalescer, CoalesSense integrated the RPS filter element in a pump to make large oil droplets from micron sized droplets
T = 20 °C, P = 10 bar, m = 0.5 kg/s

For evaluating the crogenic pressure distillation process of Condensed Rotational Separation two gas- liquid versions are realized: one at lab scale for real process conditions and one at real scale but atmospheric conditions.
An external drive is added for testing purposes

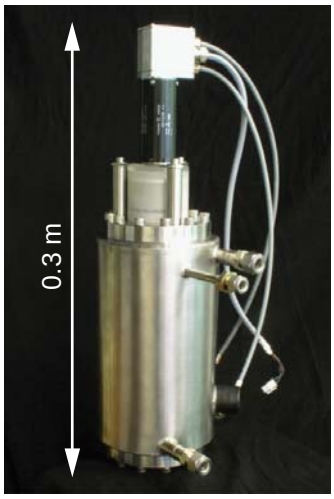

T = -60 °C, P = 27 bar,
m = 0.02 kg/s

T = 20 °C, P = 1 bar,
m = 0.3 kg/s

For general testing a version is build with a magnetic coupling for an optional external drive.
T = 20 °C, P = 8 bar,
m = 0.3 kg/s

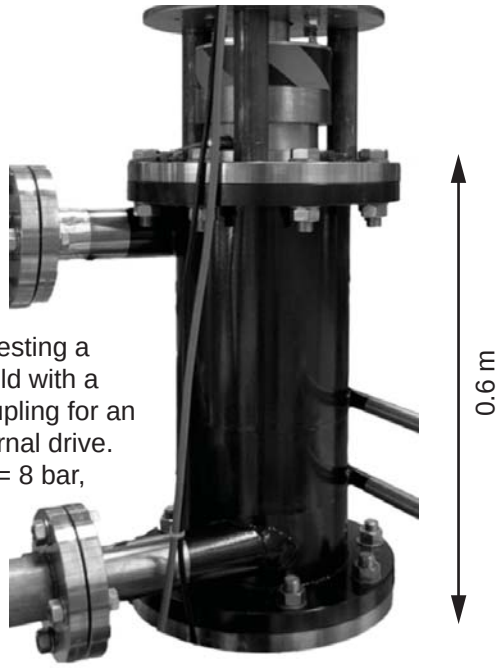

All versions perform according to the design specifications

Romico Hold Patents:WO/1994/023823;WO/2005/118110;WO/2007/097621;WO/2010/114362